SLIM

DATALOGIC

Highest mechanical flexibility for a perfect fit into machine structures
Simple commissioning and maintenance
High functional performance

- SLIM profile: 15 x 32 mm
- Pigtail cable with 5-pole M12 connectors
- Same cable for Emitter and Receiver
- No Dead Zone
- 14, 24 and 34 mm resolution
- 34 different protection lengths, with 30 mm modularity
- 3 different brackets shapes
- Cascadable up to 3 units
- Auto/Manual restart and EDM function configuration by wiring
- LED display messages diagnosis

APPLICATIONS

- Primary packaging machinery (packing, filling, labelling, etc...)
- Cutting machinery
- Automatic assembly machines and lines
- Automatic and semi-automatic quality inspection machinery
- Material handling machinery
- Bending and metal-working machinery
- Process lines

INDUSTRIES

- Food & Beverage
- Electronics
- Automotive
- Metal working

	FINGER	HAND	ARM	BODY
Type 2	x	x		
Type 4	x	x		

SL2-14-0150-E

TYPE	
2	Type 2
4	Type 4

RESOLUTION	
14	Finger : 14 mm
24	Hand: 24 mm
34	Hand: 34 mm

MONITORED HEIGHT	
0150	150 mm
0210	210 mm
0270	270 mm
0300	300 mm
...	
1200	1200 mm

VERSION	
E	EDM, Restart

TECHNICAL DATA

	SL2 [SL2-xx-xxxx-E]	SL4 [SL4-xx-xxx-E]
	GENERAL DATA	
Type (EN61496-1)	2	4
PL (EN ISO 13849-1)	c	e
SIL (IEC 61508)	1	3
Resolution	14 - 24 - 34 mm	
Protected heights	150 210 270 ... 1200 (with 30 mm steps)	
Operating distance	0.2 ...6 m	
	ELECTRICAL DATA	
Power supply (Vdd)	24 Vdc ± 20%	
Outputs	2 PNP	
Output current	0.3 A max / each output	
Capacitive load	1 uF @ 24Vdc max	
Response time*	RT = 7 ... 17 ms (14 mm resolution) RT = 7 ... 13 ms (24 mm resolution) RT = 7 ... 15 ms (34 mm resolution) Cascade Response time (up to 3 units) <= 20ms	
Cables length (for power supply)	20 m max	
	MECHANICAL AND ENVIRONMENTAL DATA	
Operating temperature	-10 ...+55 °C	
Storage temperature	-25° ... 70°C	
Humidity	15 ... 95 % (no condensation)	
Mechanical protection	IP65 (EN 60529)	
	FUNCTIONS	
	Manual/Automatic restart	
	External Device Monitoring (EDM)	
	Alignment mode	

NOTE

* Response time is dependent on height: for more details refer to product manual

DIMENSIONS

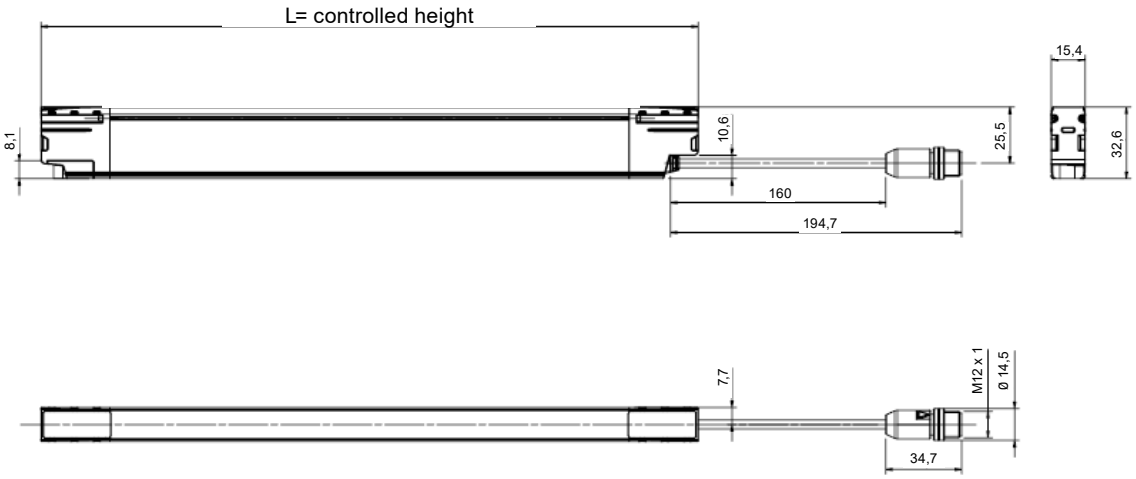

MODEL	L (mm)
SLx-yy-0150-E	150
SLx-yy-0210-E	210
SLx-yy-0270-E	270
SLx-yy-0300-E	300
SLx-yy-0330-E	330
SLx-yy-0360-E	360
SLx-yy-0390-E	390
SLx-yy-0420-E	420
SLx-yy-0450-E	450
SLx-yy-0480-E	480
SLx-yy-0510-E	510
SLx-yy-0540-E	540
SLx-yy-0570-E	570
SLx-yy-0600-E	600
SLx-yy-0630-E	630
SLx-yy-0660-E	660
SLx-yy-0690-E	690
SLx-yy-0720-E	720
SLx-yy-0750-E	750
SLx-yy-0780-E	780
SLx-yy-0810-E	810
SLx-yy-0840-E	840
SLx-yy-0870-E	870
SLx-yy-0900-E	900
SLx-yy-0930-E	930
SLx-yy-0960-E	960
SLx-yy-0990-E	990
SLx-yy-1020-E	1020
SLx-yy-1050-E	1050
SLx-yy-1080-E	1080
SLx-yy-1110-E	1110
SLx-yy-1140-E	1140
SLx-yy-1170-E	1170
SLx-yy-1200-E	1200

DIMENSIONS

OVERALL DIMENSIONS WHEN USING O-SHAPED BRACKETS

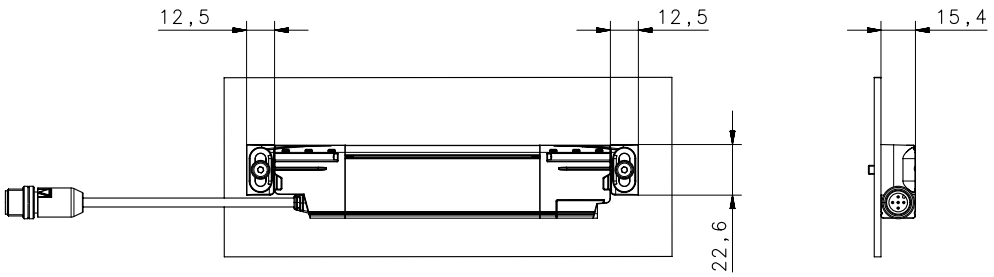

OVERALL DIMENSIONS WHEN USING C-SHAPED BRACKETS

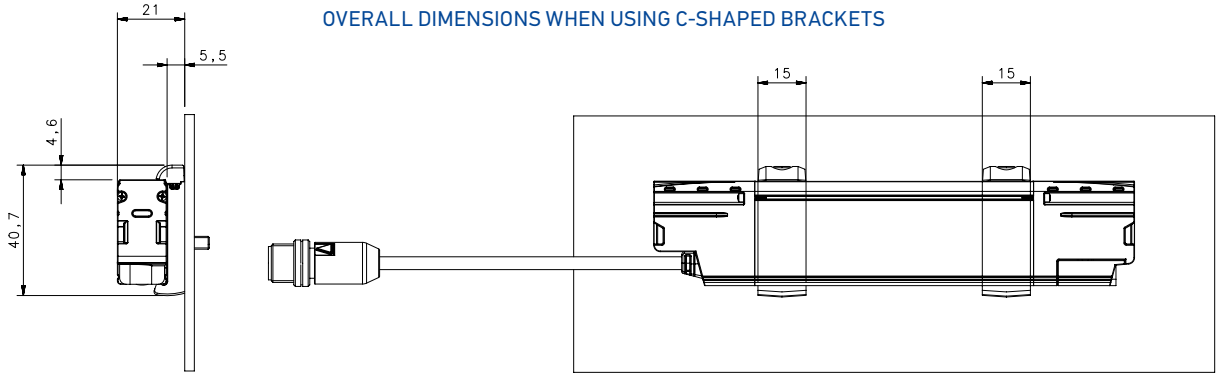

OVERALL DIMENSIONS WHEN USING L-SHAPED BRACKETS

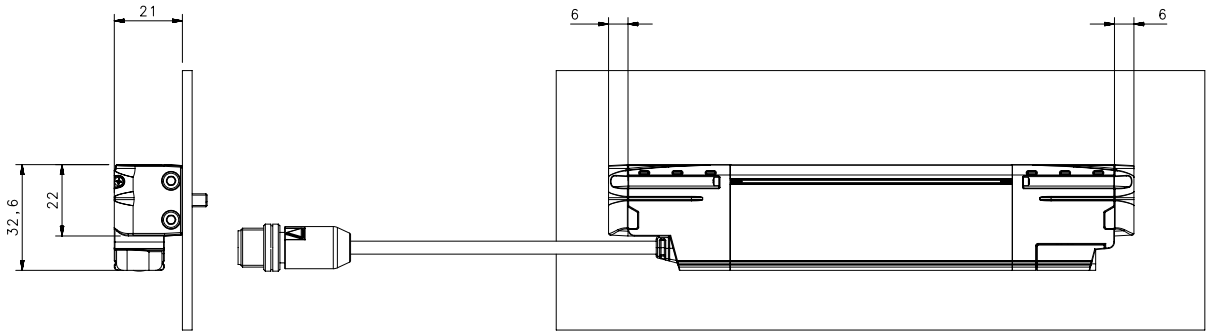

CONNECTIONS

EMITTER

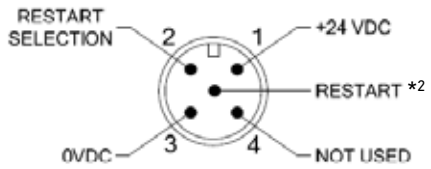

RECEIVER

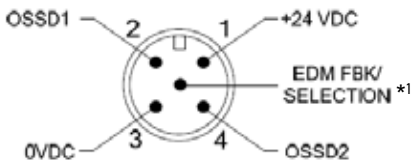

NOTES:

EDM : If connected to NC contact of a forced-guided relay, EDM function is ON; if connected to OSSD1, EDM function is OFF.

RESTART: if connected through NC contact to 24Vdc: MANUAL RESTART; if connected to RESTART SELECTION: AUTOMATIC RESTART; if left unconnected (floating): ALIGNMENT MODE.

INDICATORS

RECEIVER

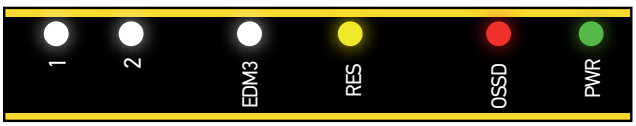

TRANSMITTER

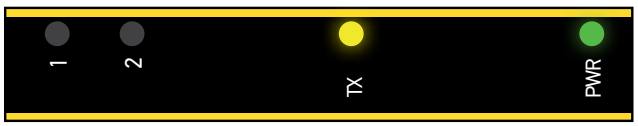

MODEL SELECTION AND ORDER INFORMATION

	FINGER PROTECTION - 14 mm RESOLUTION		HAND PROTECTION - 24 mm RESOLUTION		HAND PROTECTION - 34 mm RESOLUTION	
	SL2 [SL2-14-xxxx-E]	**Order number**	**SL2 [SL2-24-xxxx-E]**	**Order number**	**SL2 [SL2-34-xxxx-E]**	**Order number**
TYPE 2	SL2-14-0150-E	957911020	SL2-24-0150-E	957911360	SL2-34-0150-E	957911700
	SL2-14-0210-E	957911030	SL2-24-0210-E	957911370	SL2-34-0210-E	957911710
	SL2-14-0270-E	957911040	SL2-24-0270-E	957911380	SL2-34-0270-E	957911720
	SL2-14-0300-E	957911050	SL2-24-0300-E	957911390	SL2-34-0300-E	957911730
	SL2-14-0330-E	957911060	SL2-24-0330-E	957911400	SL2-34-0330-E	957911740
	SL2-14-0360-E	957911070	SL2-24-0360-E	957911410	SL2-34-0360-E	957911750
	SL2-14-0390-E	957911080	SL2-24-0390-E	957911420	SL2-34-0390-E	957911760
	SL2-14-0420-E	957911090	SL2-24-0420-E	957911430	SL2-34-0420-E	957911770
	SL2-14-0450-E	957911100	SL2-24-0450-E	957911440	SL2-34-0450-E	957911780
	SL2-14-0480-E	957911110	SL2-24-0480-E	957911450	SL2-34-0480-E	957911790
	SL2-14-0510-E	957911120	SL2-24-0510-E	957911460	SL2-34-0510-E	957911800
	SL2-14-0540-E	957911130	SL2-24-0540-E	957911470	SL2-34-0540-E	957911810
	SL2-14-0570-E	957911140	SL2-24-0570-E	957911480	SL2-34-0570-E	957911820
	SL2-14-0600-E	957911150	SL2-24-0600-E	957911490	SL2-34-0600-E	957911830
	SL2-14-0630-E	957911160	SL2-24-0630-E	957911500	SL2-34-0630-E	957911840
	SL2-14-0660-E	957911170	SL2-24-0660-E	957911510	SL2-34-0660-E	957911850
	SL2-14-0690-E	957911180	SL2-24-0690-E	957911520	SL2-34-0690-E	957911860
	SL2-14-0720-E	957911190	SL2-24-0720-E	957911530	SL2-34-0720-E	957911870
	SL2-14-0750-E	957911200	SL2-24-0750-E	957911540	SL2-34-0750-E	957911880
	SL2-14-0780-E	957911210	SL2-24-0780-E	957911550	SL2-34-0780-E	957911890
	SL2-14-0810-E	957911220	SL2-24-0810-E	957911560	SL2-34-0810-E	957911900
	SL2-14-0840-E	957911230	SL2-24-0840-E	957911570	SL2-34-0840-E	957911910
	SL2-14-0870-E	957911240	SL2-24-0870-E	957911580	SL2-34-0870-E	957911920
	SL2-14-0900-E	957911250	SL2-24-0900-E	957911590	SL2-34-0900-E	957911930
	SL2-14-0930-E	957911260	SL2-24-0930-E	957911600	SL2-34-0930-E	957911940
	SL2-14-0960-E	957911270	SL2-24-0960-E	957911610	SL2-34-0960-E	957911950
	SL2-14-0990-E	957911280	SL2-24-0990-E	957911620	SL2-34-0990-E	957911960
	SL2-14-1020-E	957911290	SL2-24-1020-E	957911630	SL2-34-1020-E	957911970
	SL2-14-1050-E	957911300	SL2-24-1050-E	957911640	SL2-34-1050-E	957911980
	SL2-14-1080-E	957911310	SL2-24-1080-E	957911650	SL2-34-1080-E	957911990
	SL2-14-1110-E	957911320	SL2-24-1110-E	957911660	SL2-34-1110-E	957912000
	SL2-14-1140-E	957911330	SL2-24-1140-E	957911670	SL2-34-1140-E	957912010
	SL2-14-1170-E	957911340	SL2-24-1170-E	957911680	SL2-34-1170-E	957912020
	SL2-14-1200-E	957911350	SL2-24-1200-E	957911690	SL2-34-1200-E	957912030

	SL4 [SL4-14-xxxx-E]	**Order number**	**SL4 [SL4-24-xxxx-E]**	**Order number**	**SL4 [SL4-34-xxxx-E]**	**Order number**
TYPE 4	SL4-14-0150-E	957910000	SL4-24-0150-E	957910340	SL4-34-0150-E	957910680
	SL4-14-0210-E	957910010	SL4-24-0210-E	957910350	SL4-34-0210-E	957910690
	SL4-14-0270-E	957910020	SL4-24-0270-E	957910360	SL4-34-0270-E	957910700
	SL4-14-0300-E	957910030	SL4-24-0300-E	957910370	SL4-34-0300-E	957910710
	SL4-14-0330-E	957910040	SL4-24-0330-E	957910380	SL4-34-0330-E	957910720
	SL4-14-0360-E	957910050	SL4-24-0360-E	957910390	SL4-34-0360-E	957910730
	SL4-14-0390-E	957910060	SL4-24-0390-E	957910400	SL4-34-0390-E	957910740
	SL4-14-0420-E	957910070	SL4-24-0420-E	957910410	SL4-34-0420-E	957910750
	SL4-14-0450-E	957910080	SL4-24-0450-E	957910420	SL4-34-0450-E	957910760
	SL4-14-0480-E	957910090	SL4-24-0480-E	957910430	SL4-34-0480-E	957910770
	SL4-14-0510-E	957910100	SL4-24-0510-E	957910440	SL4-34-0510-E	957910780
	SL4-14-0540-E	957910110	SL4-24-0540-E	957910450	SL4-34-0540-E	957910790
	SL4-14-0570-E	957910120	SL4-24-0570-E	957910460	SL4-34-0570-E	957910800
	SL4-14-0600-E	957910130	SL4-24-0600-E	957910470	SL4-34-0600-E	957910810
	SL4-14-0630-E	957910140	SL4-24-0630-E	957910480	SL4-34-0630-E	957910820
	SL4-14-0660-E	957910150	SL4-24-0660-E	957910490	SL4-34-0660-E	957910830
	SL4-14-0690-E	957910160	SL4-24-0690-E	957910500	SL4-34-0690-E	957910840
	SL4-14-0720-E	957910170	SL4-24-0720-E	957910510	SL4-34-0720-E	957910850
	SL4-14-0750-E	957910180	SL4-24-0750-E	957910520	SL4-34-0750-E	957910860
	SL4-14-0780-E	957910190	SL4-24-0780-E	957910530	SL4-34-0780-E	957910870
	SL4-14-0810-E	957910200	SL4-24-0810-E	957910540	SL4-34-0810-E	957910880
	SL4-14-0840-E	957910210	SL4-24-0840-E	957910550	SL4-34-0840-E	957910890
	SL4-14-0870-E	957910220	SL4-24-0870-E	957910560	SL4-34-0870-E	957910900
	SL4-14-0900-E	957910230	SL4-24-0900-E	957910570	SL4-34-0900-E	957910910
	SL4-14-0930-E	957910240	SL4-24-0930-E	957910580	SL4-34-0930-E	957910920
	SL4-14-0960-E	957910250	SL4-24-0960-E	957910590	SL4-34-0960-E	957910930
	SL4-14-0990-E	957910260	SL4-24-0990-E	957910600	SL4-34-0990-E	957910940
	SL4-14-1020-E	957910270	SL4-24-1020-E	957910610	SL4-34-1020-E	957910950
	SL4-14-1050-E	957910280	SL4-24-1050-E	957910620	SL4-34-1050-E	957910960
	SL4-14-1080-E	957910290	SL4-24-1080-E	957910630	SL4-34-1080-E	957910970
	SL4-14-1110-E	957910300	SL4-24-1110-E	957910640	SL4-34-1110-E	957910980
	SL4-14-1140-E	957910310	SL4-24-1140-E	957910650	SL4-34-1140-E	957910990
	SL4-14-1170-E	957910320	SL4-24-1170-E	957910660	SL4-34-1170-E	957911000
	SL4-14-1200-E	957910330	SL4-24-1200-E	957910670	SL4-34-1200-E	957911010

ACCESSORIES SELECTION AND ORDER INFORMATION

BRACKETS		ORDER NUMBER
C-shaped Brackets (included): 2 pcs kit	ST-K2-SL-C	95ASE2510
O-shaped Brackets (included): 4 pcs kit	ST-K4-SL-O	95ASE2520
L-shaped Bracktets: 2 pcs kit	ST-K2-SL-L	95ASE2540
C-shaped Orientable Brackets: 2 pcs kit	ST-K2-SL-C-OR	95ASE2530
MIRRORS		
Deviating Mirrors	SG-DM Series	See NOTE 1
Deviating Mirrors mounting kit for SG-PSB	ST-PS-DM	See NOTE 1
Mirror Mounting Bracket	ST-DM	See NOTE 1
SAFETY UNITS		
Safety Unit	SE-SR2	95ACC6170
EDM Relay Box**	CS-ME	95ASE1270
Safety control unit for single beams and SLC (with muting)	SG-BWS-T4-MT	957051010
TEST PIECES		
Test Piece 14mm L=300mm	TP-14	95ACC1630
Test Piece 24mm L=200mm	TP-24	95ASE2570
Test Piece 34mm L=200mm	TP-34	95ASE2580
NOTES		

NOTE 1 : For order numbers of these accessories refer to SAFETY REFERENCE GUIDE or to datasheets of SG-DM accessories
NOTE 2: When using EDM Relay Box or Muting connection box, connect EDM input, and be sure EDM function is active on the safety light curtain

BRACKETS

C-shaped bracket

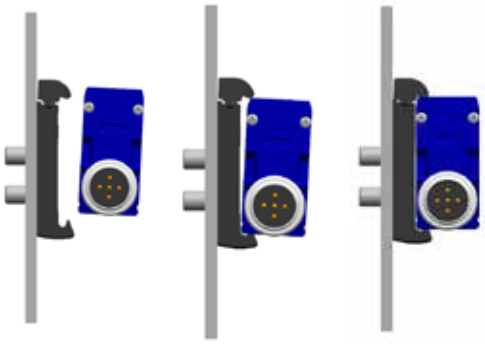

C-shaped brackets fixing

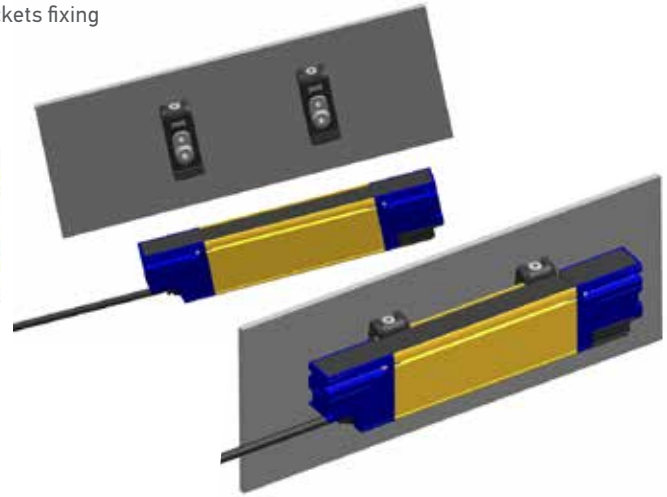

O -shaped bracket

O -shaped brackets fixing

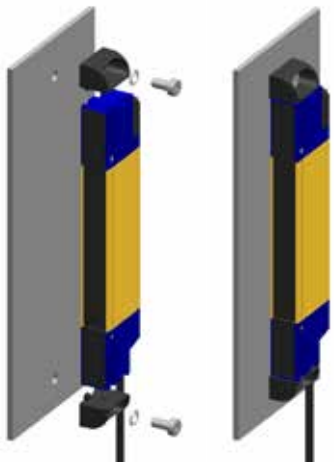

L - shaped bracket

L-shaped brackets fixing

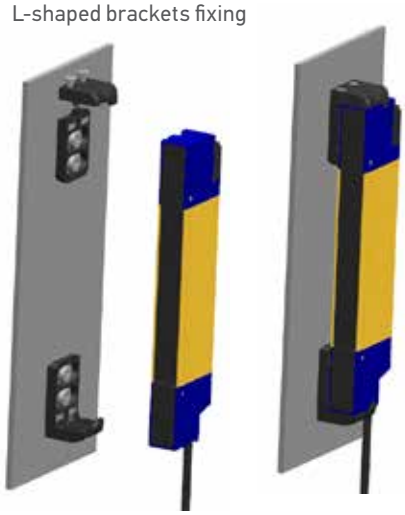

CABLES

	RECEIVER/TRANSMITTER CABLE	LENGTH (M)	ORDER NUMBER
SL2/SL4 [SLx-xx-xxxx-E]	CS-A1-03-U-03	3	95ASE1170
	CS-A1-03-U-05	5	95ASE1180
	CS-A1-03-U-10	10	95ASE1190
	CS-A1-03-U-15	15	95ASE1200
	CASCADE CABLES	**LENGTH (m)**	**ORDER NUMBER**
SL2/SL4 [SLx-xx-xxxx-E]	CS-H1-03-B-001	0.1	95A252950
	CS-H1-03-B-005	0.5	95ASE2550
	CS-H1-03-B-01	1	95ASE2560

NOTE

All cables have axial connectors

CASCADE CABLE DIMENSIONS

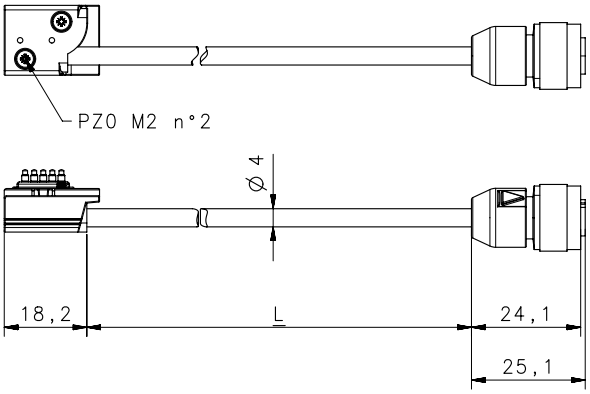

CASCADE CABLES	L -/+ 10 (mm)
CS-H1-03-B-001	90
CS-H1-03-B-005	490
CS-H1-03-B-01	990

TO CONNECT CASCADE UNIT:

Fix all cascade units with proper brackets. (1)
Remove Terminator Caps at the end of Master by loosening the two fixing screws for both emitter and receiver. (2)
Fasten the cascade cables in place of removed terminator caps, ensure all cables bend radius it's not less than 4mm. (3)
Connect Slaves M12 male connectors to M12 Female connectors from cascade cables. (4)

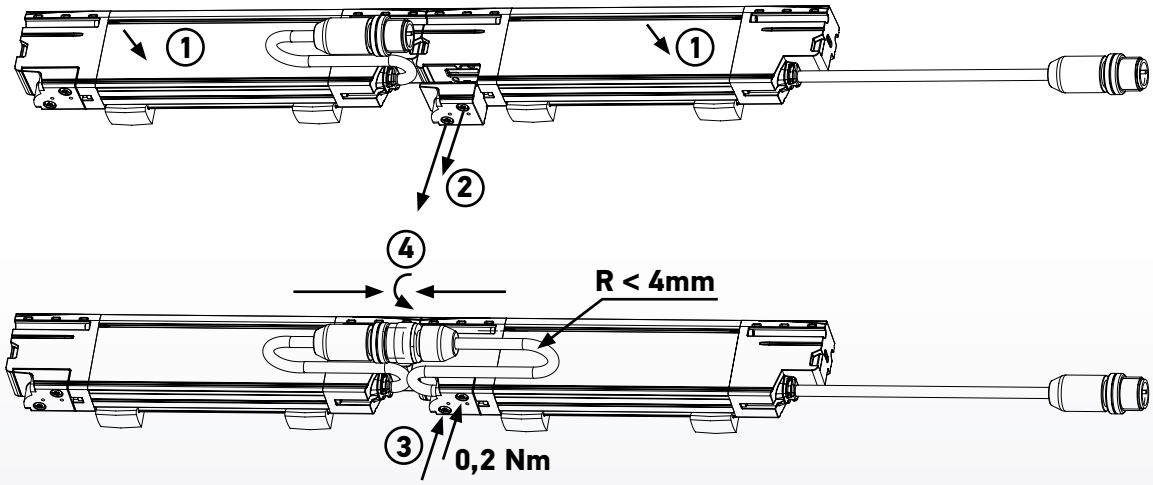

Rev. 05, 05/2016

DATALOGIC PRODUCT OFFERING

Sensors

Hand Held scanners

Mobile Computers

Laser Marking Systems

Vision Systems

Stationary Industrial Scanners

Safety Laser Scanner

RFID Systems